DOI: https://doi.org/10.67862/hjjgs.2021.8o4at6ew

ARTICLE TWELVE

QUALITY PRINTING AND CONSISTENCY IN TEXTILE DESIGN FOR FUNCTIONAL ENTREPRENEURSHIP EDUCATION AND SELF-RELIANCE

MR. AKILA YUSUF GUNOK & DR. EZRA RABO SAMUILA

Abstract

The paper discusses the concept of entrepreneurship with the focus on textile design, which looks at fabric printing as a veritable engagement for self-reliance and economic development. It also describes the benefits derivable from the learning and practising of a vocation in textile design and screen printing, particularly on the individual who engages in the practice to tackle unemployment. The methods and practical procedures for obtaining quality-printed and consistent fabric are done and discussed lucidly with the intended beneficiaries who are students and studio practitioners. The paper concludes that consistency in printing, especially silk screen printing during reproduction, depends largely on the methods that are employed. The recommendations are that there is need for adequate funding and resuscitating of the comatose textile industry in Nigeria. The curriculum development in our tertiary institutions is to include functional educational courses such as textile design and technology, among others. Finally, the establishment of public and private entrepreneurship skills-acquisition centres, mounting of vigorous workshops and seminars in the vocational disciplines are hereby advocated.

Keywords: Entrepreneurship, Functional-Education, textile design, Screen printing, and self-reliance

Introduction

Nigeria is endowed with natural resources which place the country on a higher economic position in Africa. Despite the aforementioned, Nigeria is grappling with acute unemployment and under-development. This could partly be as a result of the negligence on the type of education which has a functional entrepreneurship syllabus. The result is noticed on the unemployed graduates who supposedly should have acquired practical knowledge that can be of benefit to them and the development of the economy. This situation is taking a huge toll on the employment market, especially white-collar jobs. It is expected that the practical based courses like the textile printing should provide self-employment for such graduates and also employ others under them. It is therefore important to look for ways to transform and manage the enormous resources which are at the disposal of the educational sector, to achieve economic development through functional education. It is on this premise that NEPAD (2001) submits thus, "Nigeria is the largest oil-producing country in Africa as a whole; but has the world's third-largest concentration of poor people", which perhaps, springs from unemployment related issues. This problem of unemployment and underemployment is noticeable not only among the youths but among those who are retired from the white-collar jobs.

It is observed that most entrepreneurship development programmes introduced by the government of Nigeria are not properly implemented. It is assumed that there are little or no proper plans for skill-acquisition programmes in the education sector. The lingering problems could probably be traced to improper allocation of provisions to acquire relevant materials/tools, disbursement of funds and grants to train personnel. At instances where people are trained in skills acquisition, the knowledge becomes a waste simply because the graduates from these programmes are not empowered to acquire the needed materials for practical works. This becomes glaring when the persons who acquire such practical skills are from poor backgrounds.

The clamour to create job opportunities

Department of Fine and Applied Arts, Faculty of Environmental Science, University of Jos, Plateau State E-mail: akilayusuf247@yahoo.com, Department of Fine and Applied Arts, Faculty of Environmental Science, University of Jos, Plateau State E-mail: ezeesamaila@gmail.com

Corresponding Author
AKILA YUSUF GUNOK
E-mail: akilayusuf247@yahoo.com,

through entrepreneurship has been on. One of such calls is observed in Akubue and Molokwu's (2013) definition of entrepreneurship: "Entrepreneurship is a process of creating and developing business enterprise that is capable of entering new markets, by uniquely developing resources and people." Furthermore, Nwokolo (2007) explains that "entrepreneurship is a way of acquiring skills, ideas and managerial abilities necessary for personal self-reliance." The authors profess that skill is an enterprise which can create jobs and develop resources meaningfully. Thus, if entrepreneurship is embraced, it can bring relief to the unemployment market.

It will be unfair to the government to assert vehemently that it has not done anything to encourage entrepreneurship and skills acquisition. At various levels and times, efforts have been made by the government through programmes such as the National Directorate for Employment (NDE) and Sure-P. These are designed to possibly tackle the poverty status of citizens. It is of great importance to reemphasise that job opportunities are hugely created through functional entrepreneurship education. This can be achieved when education curriculum is designed to move with the dynamics of time, environmental changes, market forces, sciences and technology respectively.

Entrepreneurship:

Entrepreneurship has received much attention from authors who view it from different points. One of such is Adawus (2010) who notes that "entrepreneurship is the life survival and advancement wheel of every individual and society through legal wealth creation, maximization and multiplication." It has become of uttermost importance for any society to diversify the thoughts and actions of how teaching and learning of functional vocations should be implemented. It should be hinged on the principles, practices and strategies of entrepreneurship in homes (families), schools and colleges for more practical and creative skills acquisition. Mgboro and Igba (2013) also explain that

> ... this situation has been attributed in part to the scarcity of employment opportunities and the inability of youths to create employment. The National Universities Commission (NUC) recently rose to the challenges and introduced entrepreneurship education in the undergraduate curricular of universities. The focus is on helping youths acquire economic and social skills that will enable them to become self-employed and to contribute meaningfully to society.

The author explains that the effort to teach entrepreneurship knowledge to students has been heightened by NUC who introduced skills acquisition courses in Nigerian universities with the aim of making her graduates self-employable.

Entrepreneurship also as seen by Lamech (2001)

> means creating new things using special skills to make things created beneficial or useful to the entrepreneur and the society at large. Entrepreneurship, in this context, involves occupational skill development of the youths, families and the society at large, to develop or build the confidence in their capability to become successful and self-reliant.

Entrepreneurship cannot grow in isolation without the involvement of the entrepreneur. As such, the importance of the entrepreneur is emphasised by Switten in Maikarfi and Samuila (2018) as someone who "drastically upgrades the yield from resources and creates a new market and a new customer." This exactly fits into the advocacy for skilful entrepreneurship in Nigeria's educational institution. In Nigeria's institutions of higher learning, vocational courses like Home Economics, Fine and Applied Arts, Agriculture, Business Education and Technical Drawing are entrepreneurship courses, which can provide self-reliance jobs in the society. That probably explains why Lemchi, (2001) and Ossai (2001) note separately that clothing and textiles are among the courses offered in Nigerian tertiary institutions. One of its objectives is to produce skilled persons in the field who are to play effective roles in national economic, technological growth and development. This revelation is potent in sensitizing and

educating Nigerian populace to key in the objectives of the entrepreneurship subjects in higher institutions.

Clothing as one of the entrepreneurship courses as earlier mentioned plays a vital role in human lives which is classified as one of the basic needs of man. Arubay (2003) avers that "clothing and textile education is a branch in Home Economics education that is concerned with the acquisition and development of practical skills by beneficiaries." This becomes important for the paper which seeks to examine the quality and consistency of registration during print impressions on textile design and adopting silk-screen printing techniques on fabric as a means of functional self-sustaining entrepreneurship.

The purpose of discussing this technique of textile design and silk screen printing is to help the learners acquire knowledge, basic skills and techniques for meeting personal and societal textile needs. It also teaches the learner in schools and private studios how to strategically plan and use available resources from the immediate environment. Also, it educates the learner on the ability to use a screen printing process to develop and create designs for fabric decoration. This is derived from what Textile design stands for: It is a skill-oriented discipline that helps to equip the individual with functional and economical skills needed for self-reliance and apprenticeship opportunities.

In another viewpoint, Entrepreneurship, as argued by Lankford (2004), is

> the process of creating something different in value by devoting the necessary time and assuming the accompanying financial, psychic and social risks and reviewing the resulting rewards of the most personal satisfaction. Entrepreneurship creates a dynamic process of problem-solving. It involves the application of energy and passion for creating and implementing new ideas and creative solutions. Entrepreneurship is also seen as a way of practice or putting together innovation and opportunity to address critical social and environmental issues, a way of empowering people on a sustainable base. It helps one to make better, those services and demands required in society. It helps one to keep a step ahead of other competitors and provide the consumers with fresh ideas that go beyond mere problem-solving.

This paper is not only directed at textile designers or studio practitioners but to the literature of textile education in Nigeria, as the study specifically covers areas such as:

- Educating the general public on textile design printing processes, leading to the development of functional entrepreneurship.
- Enhancing quality production of studio-based textile entrepreneurs.
- Enhancement of quality printing and consistency in textile designs patterns in the execution of a screen printing technique on fabric.

This paper, as a matter of emphasis, investigates the root causes for lack of precision in the registration of textile designs and inconsistency during the impression. It also identifies entrepreneurship skills needed for the development of functional education in this area of Vocational and Technical education. Over time, there have been challenges in printing and consistency in textile design. Such unskilled practices are responsible for the poor appreciation of textile products by clients, fashion lovers, art collectors and the general populace. The textile design provides opportunities for livelihood through skills acquisition in terms of training in studios, art agencies, textile studios, textile industries and art galleries in institutions. That is why Banjoko (2009), in general terms, states that "vocational courses like textiles, paintings and ceramics, etc. provide vocational and employment opportunities that can lead to national development and self-sustainability." A pictorial example is seen in Plate I.

Plate 1. Silk Screen Print, Fabric and Printing Ink, 78cm x 73cm, Arkila Yusuf Gunok, 2016.

The image in plate 1 was a test of silk screen printing on fabric titled "Living Together", as a work done on dyed fabric which depicts an aspect of poultry carrying the images of fish and birds which served as the design motifs.

Materials and Methods

The materials used for dyeing are:

- 100% clean white cotton fabric
- Heat source (stove) for boiling water
- Dyes of assorted colours
- Plastic bowls
- Rubber gloves
- Caustic soda (sodium hydroxide)
- Sodium hydrosulphite
- Alum
- Salt
- Spoons

The dyeing tests were carried out in the textile studio of the Department of Fine and Applied Arts, College of Education, Gindiri, Plateau State, Nigeria. The experimentation was conducted as follows:

Procedure:

Stage 1 - Pre-Treatment of Fabric

It is believed that during the manufacturing of fabric all fabrics are pre-cured. The curing process involves sizing agents like starch, wax and grease which come as a result of finishing procedures (Oguntona, 1986). It is always, therefore, necessary to free the fabric of impurities. This was done by immersing the fabric in a bath containing hot water that was mixed with detergent and allowed to dissolve in the solution for 15 minutes after which it is washed. The material (fabric) was then washed, rinsed and hung to dry, ready for dyeing. The main aim of this pre-treatment is to ensure a high level of colour absorption during the dyeing process.

Stage 2- Procedure for dyeing

Many types of dyes can be used, depending on the manufacturers and variety. There are two types of dyes, which are: cold-water dye and warm or hot-water dye. For this test printing, warm water dye was used. They are found either in powdered or liquid form. Their qualities also vary, depending on the method of production and the manufacturer.

As a general principle, the fabric to be dyed must be clean. After removing the wax or grease, the desired colour of dye was selected. The dye was mixed with solutions inside a plastic container of warm water, and then the clean fabric dipped inside. The fabric was stirred continuously with a stick and at times, with the hands in rubber gloves to properly dissolve the dye-lumps for even absorption by the material. The material was allowed to stay inside the dye for 45 minutes; this was for proper absorption, after which the fabric was removed from the dye and rinsed in cold water.

Thereafter, the dyed fabric was dried under a shade and then pressed with a hot iron to make it ready for the silk screen printing process. Dyed materials are allowed to dry under the shade because solar rays can affect the oxidation of dye on a piece of fabric.

Silk Screen Printing Process

Plate II: Screen Printing using a Mesh and Squeegee, Arkila Yusuf Gunok. 2016

This is a process whereby the silk or organ die is tightly stretched over a wooden frame while paint or ink is forced into some predetermined areas onto another surface such as paper, fabric, wood or plastics to reveal the desired impression. The silkscreen impression serves as a means of communication through its design motifs, symbols, shapes, forms or patterns. This aspect of textile design can go a long way in solving some of the challenges of unemployment, thus enhancing economic development. This buttresses Banjoko's (2000) assertion that "it is also a career opportunity and a veritable source of earning foreign exchange."

Materials

- Printing frame
- Paper
- Organdie
- Squeegee
- Emulsion
- Sensitizer
- Printing ink(Opaque ink)
- Sponge masking tape
- Rags
- Bucket
- Pencils
- Bleach
- Thinner
- Gum
- Drawing pins (thumb tags)
- Stapler
- Staple pins
- Hagen lamb (for heating the created designs after printing)

Method and Procedure:

The silkscreen printing method of textile design is usually adopted to achieve the desired quality print, consistency and sharpness of the design. The following steps were adopted in the screen printing process of the work.

Stage 1

A wooden frame measuring 75cm x 73cm was constructed based on a predetermined concept. The mesh was strongly stretched and stapled with drawing pins. This can also be done with gum or a combination of both, to fasten the silk and wooden frame to avoid loss of shape as well as to ensure for a smooth printing.

Stage 2

The emulsion was mixed with sensitizer according to the size of the stencil to avoid waste. A coating of this mixture was then applied to the back of the mesh in the darkroom to avoid any contact with light and then allowed to dry.

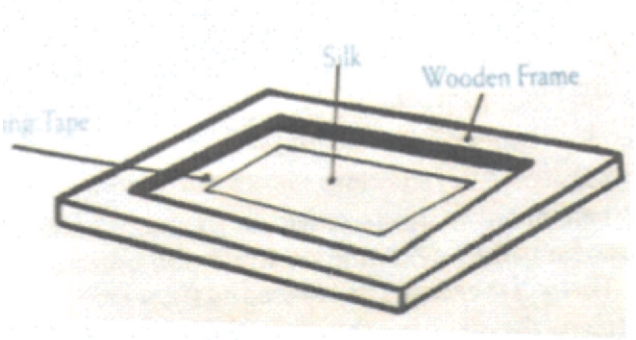

Plate III: Mesh with Emulsion

Stage 3

The unit of design communicating the message was traced onto a plain piece of paper in solid black lines and soaked in kerosene to create transparency when it is dry.

Stage 4

The traced paper was taken into the darkroom, turned upside down and laid on the surface of the coated mesh. It was then exposed under sunlight for 22 seconds to absorb heat from the sun. Water was then used to wash and reveal the openings of the design used for printing the impressions.

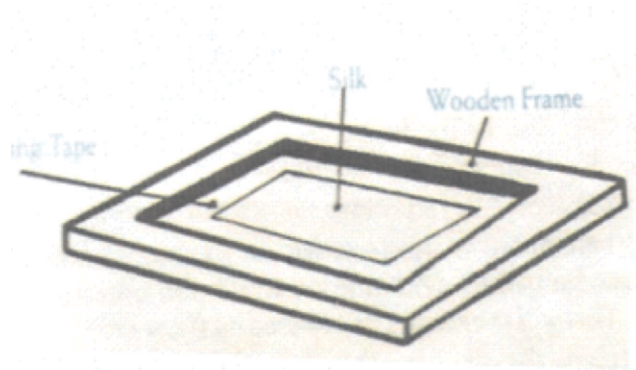

Plate IV: Exposed Mesh

Stage 5

The mesh was allowed to dry after which some small mesh holes were blocked with emulsion using a brush. This was to avoid leakages of the ink during printing. Masking tape and cello-tape were used to block the edges of the frame where emulsion could not cover. This was done to also avoid printing ink from running into the spaces between the mesh and the wooden frame. It was also used to help in sharpening the edges of the design. Printing can be done in monochrome or polychrome. The frame for each colour was made and used in the printing one after the other from the lightest to the darkest colour. Note that overlapping design could be printed through the use of the same technique.

Stage 6

The printing process began by spreading the fabric on a flat, hard platform. The frame was then placed on the desired space and the opaque ink applied at the top corner of the frame. A squeegee was used to draw the ink over the design and stretched mesh, down to the bottom side of the frame to force the ink onto the fabric.

Stage 7

When the printing was successfully done, Hugen light, which served as a heat source, was used to heat the printed design to dry and fix the ink on the fabric. A hot pressing iron was used to achieve the same effect at some points.

Stage 8

After printing, the frame was washed with thinner. (Kerosene or petrol could as well be used to wash the frame or mesh). This is done to preserve the frame for future use. The advantage of silk screen printing is that the mesh can be washed clean and used for another design and printing.

Conclusion

Based on the results of the printing process, it could be seen that quality printing and consistency in textile design is determined by successful silk screen printing stages and techniques including the construction of a good wooden frame, mounting the mesh, emulsion and sensitizer mixture consistency, correct exposure, choice of fabric, careful printing and final fixing of good ink. All these stages and techniques were carefully followed resulting in the sharp and clear printed fabric in the final production. It must be stated however that consistency in printing, especially silk screen printing, depends largely on the methods the textile designer employs. By so doing, the entrepreneur with clear printed fabrics will draw the attention of buyers and lovers of textile.

The ripple action will, therefore, create jobs for the producers and businesses for marketers who buy and sell materials. The circle of generating funds through the silk-screen printing method will boost the economy. It will also expand the textile industry whereby companies that produce fabric, chemicals and dyes will not run out of business. There will also be a boost in apprenticeship training for both the young and old alike which is a direct solution to tackling unemployment in the country.

Recommendations

Textile design on fabric, alongside past designs produced by other contemporary textile designers and artists, contributes in no small measure in solving some challenging issues of functional education today. It is envisaged that the following recommendations can reduce some of the problems and improve the quality of vocational education, especially printing quality and consistency in textile design in Nigerian schools when they are properly implemented.

1. The curriculum for university education developed by the National Universities Commission (NUC) should include vocational courses that can lead to self-reliance on completion of the course of study.
2. The Nigerian government at the Federal, State and Local government levels should be encouraged to establish vocational courses and research departments leading to self-reliance. Deliberate efforts should be made to grant aids to such programmes.
3. The Nigerian textile industry should be properly funded to give room for employment of graduates of vocational institutions and the creation of youth vocational skills in various departments of tertiary institutions.
4. The private sector and individuals should be encouraged to establish entrepreneurship skills acquisition centres in the local government

areas of Nigeria.

5. Federal, State and local governments should organize periodic seminars and workshops on entrepreneurship skills, especially for Secondary and post-secondary school leavers.

References

Adawus, M. A. (2010). Entrepreneurship principles, practice and strategies. Mangu: Centino Press.

Akubue, B. N., & Molokwu, W. (2013). Entrepreneurship skills for youths in Ebonyi and Enugu states, *Journal of Home Economics Research* 1(3), vol. 19 pp 6-15.

Banjoko, I. (2009). *Cultural and creative arts made easy.* Lagos: Movie Publishing Company Ltd.

Maikarfi, D., & Samuila, E. R. (2018). The role of gender in entrepreneurship development: A sculptural perspective. A Proceeding of the International Conference of the Faculty of Environmental Studies (FESIC 2018). Building Capacity for Self-Reliance: Entrepreneurship and Environmental Development. The Faculty of Environmental Studies, University of Uyo, Uyo, Akwa Ibom, 11th-14th July, 2018. Pp. 182

Lanford, C. (2004). Issue in Entrepreneurship. Weekly Article, 4 (2), 1-3.

Lemech, S. (2001). Strategies for reducing stress from clothing construction /practical in secondary schools. *Journal of Home Economics Research, 12*(4), 23-32.

Nwokolo, P. Z. (2007). *Practical approach to entrepreneurship small and medium scale enterprises.* Enugu: Precision Publishers Ltd.

Ossai, R. U. (2001). Strategies for improving public image. *Journal of Home Economics, 2*(5), 11-23.